Journal of Chromatography, 483 (1989) 111–120
Elsevier Science Publishers B.V., Amsterdam — Printed in The Netherlands

CHROM. 21 976

AUTOMATIC ON-LINE PRESSURIZED LIQUID INJECTION IN GAS CHROMATOGRAPHY

J. H. MARSMAN*, H. J. PANNEMAN and A. A. C. M. BEENACKERS
Department of Chemical Engineering, University of Groningen, Nyenborgh 16, 9747 AG Groningen (The Netherlands)
(First received June 22nd, 1989; revised manuscript received September 5th, 1989)

SUMMARY

An automated on-line gas chromatographic method was developed for accurate kinetic studies of the catalytic synthesis of methyl *tert.*-butyl ether from methanol and 2-methylpropene. It includes a pressurized liquid injection valve that can be used for the direct introduction of liquified mixtures. The influence of the pressure and density of the sample mixture is discussed and the theoretical predictions are compared with the experimental results. The relative standard deviation of the results was to be better than 0.1% for the integrated peak area of 2-methylpropene ($n = 6$). The pressurized injection technique also offers good possibilities for capillary gas chromatography.

INTRODUCTION

Both for reliable kinetic studies and for efficient process control, accurate automated on-line analysis is essential[1,2]. To obtain accurate reaction rate constants for, *e.g.*, the kinetics of the synthesis of methyl *tert.*-butyl ether (MtBE), the availability of a gas chromatographic (GC) method for precise and reproducible analysis is a prerequisite. Nowadays MtBE is synthesized on a large scale from methanol and 2-methylpropene as a substitute for the anti-knock agent tetraethyllead (TEL) in automotive fuels.

Reaction mixtures containing volatiles cannot be sampled without gas–liquid phase separation at room temperature and atmospheric pressure. For off-line analysis, such samples require thorough cooling prior to direct injection into a GC column with a prechilled syringe[3]. Separate analysis of the gas and liquid phases of samples containing highly volatile components has been applied by Voloch *et al.*[4] and the results of the individual gas and liquid concentrations were used to calculate the composition of the original sample.

For on-line GC techniques, volatile samples were completely vaporized by heating, prior to injection with a gas-loop injection valve[5–8]. Allenger *et al.*[7] compared syringe splitless liquid injection of hydrocarbons with gas-loop injection of the same vaporized liquid mixture. For both techniques, they obtained a correlation coefficient of $r = 0.95$ for the peak area of the components.

0021-9673/89/$03.50 © 1989 Elsevier Science Publishers B.V.

The vaporization method, however, suffers from a lack of repeatability, especially for mixtures with widely differing boiling points of the components, because of irregular vaporization. A special vaporization unit was developed by Kertzman[9] to improve the homogeneity of the vapour composition. A pressurized liquid injection technique to maintain a homogeneous liquid phase sample in the injection valve was applied by Braun and Villalobos[10]. The liquified hydrocarbon sample stream was kept below the bubble point by using both a relatively low injection temperature and an elevated pressure at the sample outlet of the valve. Mooney *et al.*[11] devised a pressurized injection technique from ASTM-method D-2597[12] for liquified petroleum gas (LPG) analysis and placed an injection valve in-line with the carrier gas supply to a capillary split injection port. The pressurized LPG sample at ambient temperature was injected by switching the internal loop of the injection valve to the carrier gas. The repeatability of this method was less than 7% [relative standard deviation (R.S.D.)].

Rushby[13] applied a pressurized injection technique for light hydrocarbons in crude oil at a temperature of 165°C. With the use of an internal standard, the repeatability of the hydrocarbon analysis (C_1–C_5) varied for the individual components from 1 to 9% (R.S.D.). He suggested the possibility of automatic operation of this technique at the sample source, but did not mention the problem of variation of the density of the sample with composition if no internal standard is used. The density effect has a large influence on the linear relationship between the peak area and the mass fraction of a component in multi-component mixtures, as shown in this paper. The deferred standard technique (sequence of alternating injections of sample and a reference component), as developed for on-line analysis by Guillemin[14], does not correct for density variations of the sample, and hence cannot be used.

In this paper, we suggest a pressurized injection technique with a composition-dependent density correction of the measured peak area. Results with good repeatability (R.S.D. = 0.1%) were obtained for the determination of 2-methylpropene (0.25–0.65 mass fraction) in a mixture of MtBE and methanol. As will be demonstrated, the corrections for changes in the density of the mixture can usually be carried out by a computer with a simple trial-and-error routine. The injection method is applicable to wide-bore capillary columns, with the advantage of a decreased analysis time compared with packed columns.

EXPERIMENTAL

A schematic diagram of the experimental set-up is shown in Fig. 1. After leaving the reactor, the product flow (a mixture of 2-methylpropene, MtBE and methanol) is thermostated at 24°C in a $\frac{1}{16}$-in. stainless-steel coil, after which it flows through a $0.1 \cdot 10^{-9}$ m^3 loop of a liquid injection valve (Valco 4CI-4WT.2). A back-pressure regulator (Tescom, MN, U.S.A.) at the outlet of the valve keeps the system at 20 bar.

The injection valve is switched by a pneumatic actuator (Valco), activated by a process-controlling computer. Component separation follows in a gas chromatograph (Perkin-Elmer 3920B) with a 1.5 m × $\frac{1}{8}$-in. I.D. stainless-steel column of 30% Carbowax 1540 on Chromosorb W AW (80–100 mesh). During injection, the carrier gas (helium) transports the sample (linear velocity u_{He} = 0.121 m s^{-1}) from the injection valve to the column [oven temperature 60°C; injection valve temperature

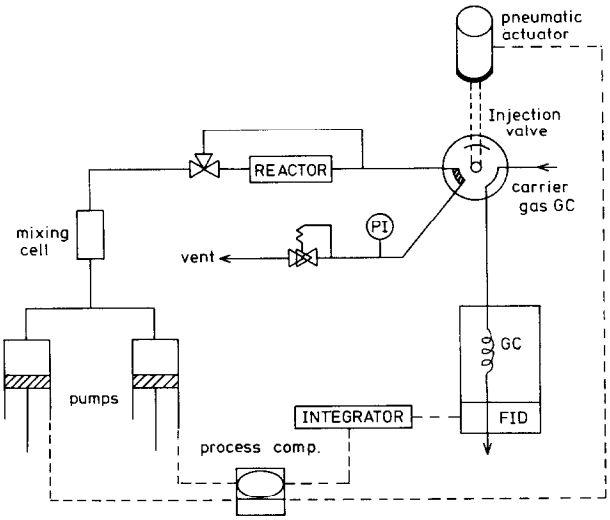

Fig. 1. Experimental set-up of the on-line injection system for chromatographic analysis.

24°C; detector temperature 175°C; sensitivity (flame ionization detector) $4 \cdot 10^{-11}$ A].

The signal output of the flame ionization detector is connected to a chromatographic integrator (Merck-Hitachi D2000), which, in turn, is connected to the process-controlling computer (Syscom 1000) via a serial interface. The relative standard deviation of the peak areas, measured in a series of identical experiments, is calculated by that computer. For R.S.D. > 0.1% (n = 5), the computer decides to repeat the experiment; otherwise, the reactor settings are changed to start the next experiment, as preprogrammed in the computer.

Calibration procedure

Two high-performance liquid chromatographic pumps (ISCO Model 314) are used for liquified 2-methylpropene and a mixture of methanol and MtBE. The flow-rate of each pump is controlled by the process computer, so mixtures of different composition can be sent to the injection valve. The density of the mixtures is calculated according to eqn. 4 (see below), neglecting contraction.

THEORY

Because the flame ionization detector is a mass detector, the measured peak area of a component is linearly related to the mass, m_i, of the component i injected:

$$A_i = km_i = kV_L\rho_m w_i \quad (1)$$

where

A_i = peak area (V s);
k = constant related to the detector response of component i [V s kg $(i)^{-1}$];
V_L = injection volume (m^3);

ρ_m = density of the mixture (kg m^{-3}) at temperature T and pressure p;
w_i = weight fraction of component i in the mixture [kg(i) kg (mixture)$^{-1}$].

If the change in density of the sample varies with composition, no linear relationship is obtained between the measured peak area and the mass fraction of a component in mixtures. For mixtures of more than two components, each of different density, no unique relationship exists between the peak area and the mass fraction of a component if the density of the mixture is unknown.

As an example of the possible variation in the mass fraction, Fig. 2 illustrates the relationship between the measured peak area and the range of mass fractions of 2-methylpropene in a ternary mixture of methanol and MtBE, with unknown concentrations. It is clear that in such applications, measuring only one component, large errors may be introduced (up to 5% in this example) if no internal standard is used.

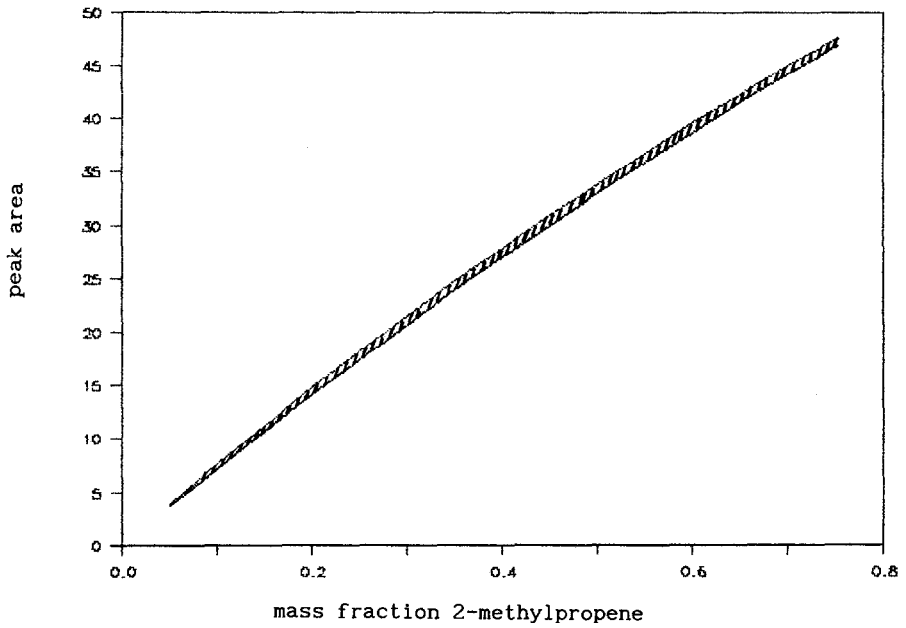

Fig. 2. Computer-simulated plot of the relationship between peak area and mass fraction of 2-methylpropene in a ternary mixture with constant-volume injection.

Therefore, if the change in density with composition for a multi-component mixture of n components cannot be neglected, we need to apply eqn. 1 in the form

$$\frac{A_i}{\rho_m V_L} = kw_i \text{ [V s kg(mixture)}^{-1}\text{]} \tag{2}$$

[We propose to call the first term in eqn. 2 the "specific response area" of component i (A_i kg^{-1})].

Now, there is a complication in interpreting the experimental results, because we

do not know the composition of the mixture prior to analysis and hence we do not know ρ_m, necessary for applying eqn. 2. To obtain the composition and density of the mixture, the mass fractions (peak-area fractions) of $n - 1$ main components need to be determined.

In general, the density of a mixture changes with composition, depending on the individual density and amount of each individual component present and the possible volume contraction (molar excess volumes) resulting from the mixing process, according to

$$\rho_m = \frac{\sum_{i=1}^{n} \frac{w_i}{M_i} \cdot v_i^0 \rho_i}{\sum_{i=1}^{n} \frac{w_i}{M_i} \cdot \bar{v}_i} (\text{kg m}^{-3}) \quad (3)$$

where

M_i = molar weight of component i (kg kmol^{-1});
v_i^0 = molar volume of the pure component i (m^3 kmol^{-1});
$\bar{v}_i$ = molar volume of i in the specific mixture (m^3 kmol^{-1});
ρ_i = density of component i (kg m^{-3}).

If no volume contraction occurs, eqn. (3) reduces to

$$\rho_m = \frac{1}{\sum_{i=1}^{n} \frac{w_i}{\rho_i}} \quad (4)$$

The way to proceed is by a simple iterative method, starting with an estimated value for ρ_m. With that value and the measured peak areas, the mixture composition can be calculated using eqn. 2. From this composition a second, more accurate, value of ρ_m is obtained via eqn. 3 or 4. This new value can be used to repeat the composition calculation, and so on, until the calculated density equals the estimated value.

RESULTS AND DISCUSSION

Typical chromatograms of the sample feed mixture and the reaction product mixture containing 2-methylpropene, MtBE and methanol are shown in Fig. 3a and b, respectively. Good peak symmetry was obtained, making peak integration easy. The relatively short analysis time obtained with the packed column, offers the opportunity for a high frequency of analysis.

In Table I, both the peak area (A_i) and the specific peak area ($A_i \rho_m^{-1} V_L^{-1}$) are presented for 2-methylpropene at various compositions of the ternary calibration mixtures.

As expected from eqn. 2, a linear relationship between the specific response area and the mass fraction of 2-methylpropene was obtained (Fig. 4). The experimentally obtained value of the correlation coefficient (r = 0.99994) not only indirectly validates the assumption of the absence of any volume contraction, but also illustrates the high accuracy that can be realized.

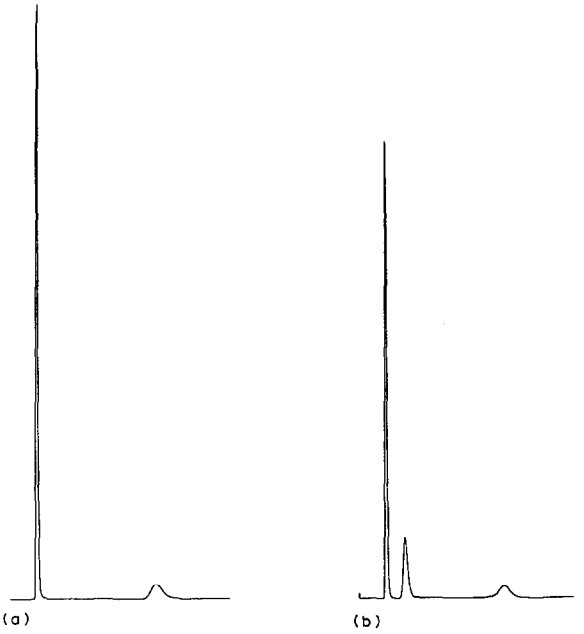

Fig. 3. Chromatogram of 2-methylpropene, MtBE and methanol. Packed column; for conditions, see Experimental. Retention times: 2-methylpropene, 20 s; MtBE, 35 s; methanol, 129 s. (a) Reactor feed. Mixture, 2-methylpropene and methanol (density = 649.3 kg m^{-3}); injection volume, 10^{-10} m^3. (b) Reaction product. Mixture, 2-methylpropene, MtBE and methanol (density = 650.0 kg m^{-3}); injection volume, 10^{-10} m^3.

The injection valve proved to have good inertness to the mentioned components. From the specifications of the valve and from the Grob test to check valve inertness[15], no adsorption or memory effects were expected and indeed these effects were not observed.

TABLE I

COMPOSITION, DENSITY, PEAK AREA (A_i) AND SPECIFIC RESPONSE AREA ($A_i\rho_m^{-1}V_L^{-1}$) OF 2-METHYLPROPENE IN THE CALIBRATION MIXTURES WITH CONSTANT-VOLUME LIQUID INJECTION

Composition (w_i)			*Mixture density (ρ_m) at 24°C*	*A_i (V s)*	*$A_i\rho_m^{-1}V_L^{-1}$ (10^{-7} V s kg^{-1})*
Methanol	*MtBE*	*2-Methylpropene*			
0.156	0.571	0.273	696.6	0.7077	1.0159
0.242	0.334	0.424	676.1	1.0766	1.5924
0.298	0.180	0.522	663.5	1.2985	1.9570
0.310	0.148	0.542	660.9	1.3416	2.0300
0.322	0.115	0.563	658.3	1.3897	2.1110
0.335	0.077	0.588	655.3	1.4442	2.2039
0.349	0.039	0.612	652.3	1.4952	2.2922
0.356	0.020	0.624	650.8	1.5189	2.3339
0.364	0.000	0.636	649.3	1.5482	2.3844

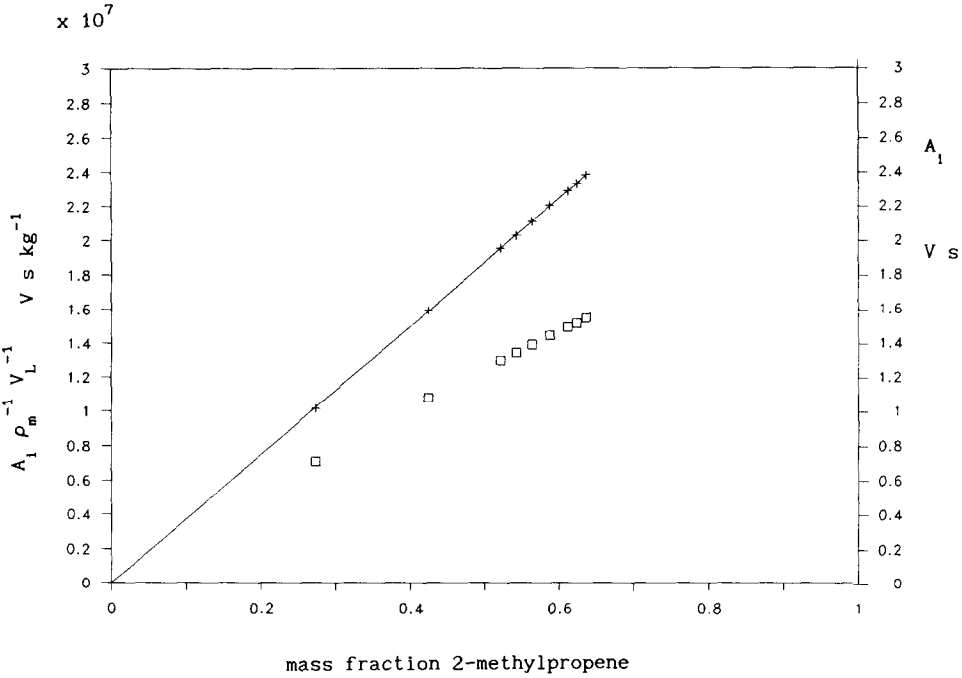

Fig. 4. Calibration graph for 2-methylpropene in mixtures of methanol and MtBE. □ = Peak area measured, A_i (V s); + = specific response area, $A_i\rho_m^{-1}V_L^{-1}$ (V s kg^{-1}).

The subsequent analysis of reactor samples of unknown composition, resulting from reaction kinetic experiments, yielded repeatable values for the 2-methylpropene mass fraction over the range of 0.25–0.65 with R.S.D. < 0.1% for the peak areas. For example, with a feed containing a 0.636 mass fraction of 2-methylpropene (ρ_m = 649.3 kg m^{-3}), a reaction product was obtained that still contained a 0.626 mass fraction of 2-methylpropene (ρ_m = 650.0 kg m^{-3}), indicating a conversion of 0.016 of the initial 2-methylpropene. The measured peak areas for 2-methylpropene were $A_{(feed)}$ = 1.5482 V s (R.S.D. = 0.06%, n = 6) and $A_{(product)}$ = 1.5584 V s (R.S.D. = 0.08%, n = 6).

The density of a sample changes not only with composition, but also with pressure and temperature. Table II shows the results of the measured peak area for methanol at various loading pressures and temperatures. The retention time and peak shape of methanol were not significantly influenced by pressure and temperature.

To verify the use of eqn. 2, the specific response areas for methanol are shown in the last column in Table II. Here, the compressibility data for methanol reported by Martin *et al.*[16] were used for density correction according to the equation $V = V_0\exp[-\beta(p - p_0)]$, where the compressibility factor $\beta_{methanol} = 1.23 \cdot 10^{-4}$ bar^{-1}, V = volume and p = pressure. The temperature dependence of the methanol density was taken from ref. 17. It may be concluded that the specific response area data are unaffected (R.S.D. = 0.2%) by pressure and temperature variations of the sample.

TABLE II

PEAK AREA AND SPECIFIC RESPONSE AREA FOR METHANOL AS A FUNCTION OF PRESSURE AND TEMPERATURE OF THE SAMPLE

Injection, $0.1 \cdot 10^{-9}$ m^3; internal loop, Valco 4 CI-4WT; see Experimental.

Injection temperature (°C)	*Pressure (bar)*	*Measured peak area (A_i) (V s)*	*R.S.D. (%)*	*Density of methanol (kg m^{-3})*	*Specific response area ($A_i \rho_m^{-1} V_L^{-1}$) (10^{-7} V s kg^{-1})*
24	10	0.7696	0.06	788.8	0.9756
24	20	0.7706	0.05	789.7	0.9758
24	25	0.7709	0.05	790.2	0.9755
24	50	0.7766	0.14	792.7	0.9797
35	20	0.7588	0.9	779.3	0.9736
47	20	0.7498	0.2	768.0	0.9763
60	20	0.7406	0.2	755.6	0.9801
				Mean:	0.9766 ± 0.2% (R.S.D.)

Capillary GC

The use of the pressurized injection method with capillary columns may raise the problems that overloading of the capillary column may restrict the direct injection of high concentrated components, and the vaporization time of the sample, after

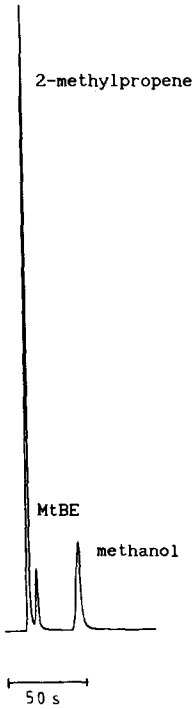

Fig. 5. Capillary gas chromatogram for a 10^{-10}-m^3 injection of the reaction mixture of 2-methylpropene, MtBE and methanol (45:5:50, w/w). Column, 10 m × 0.53 mm I.D. fused silica CP Wax 52; film thickness, 2.1 μm; oven temperature, 50°C; injection temperature, 38°C; helium carrier gas velocity, 0.68 m s^{-1}.

injection, may contribute excessively to peak broadening in the capillary column. To check the possibilities of pressurized injection, the reaction mixture was injected directly into a capillary column (Fig. 5).

Despite overloading of the column according to Grob and Grob[18], the peak symmetry is still acceptable. However, the plate number of the capillary column for methanol ($k' = 1.8$; $4 \cdot 10^{-8}$ kg) decreased to 30% of the plate number obtained by a split injection of methanol ($13 \cdot 10^{-12}$ kg) with the same column. As the retention power of the capillary wax column is low for volatile components, a thicker film of stationary phase should be used, rather than a lower column temperature, which caused front tailing of the methanol peak.

Peak broadening due to the pressurized injection is negligible, as can be calculated from the vaporization time of a component by the equation of Braun and Villalobos[10]. Under the experimental conditions used, the vaporization time of $0.1 \cdot 10^{-9}$ m^3 of methanol is 0.9 s, which is relatively short compared with the total peak variance of 10 s.

CONCLUSIONS

On-line liquid injection valves are very suitable for the analysis of pressurized product streams containing volatile components. These valves are easily applicable both in automation projects on a laboratory scale and in process control equipment. The small loop volume ($0.1 \cdot 10^{-9}$ m^3) allows for a large measuring range of the components, up to 100%. With experimentally obtained relative standard deviations below 0.1%, the accuracy of the method is extremely good.

If the density of the mixture varies significantly with composition, a simple iterative procedure must be programmed into the on-line computer. This does not complicate the method, provided that the density as function of composition of the mixture is known.

The pressurized injection technique is also applicable in capillary GC.

ACKNOWLEDGEMENT

The authors thank Mr. L. Balt for valuable advice on instrumental applications.

REFERENCES

1 H. Hachenberg, *Chem.-Ing.-Tech.*, 54 (1982) 553.
2 H. Hachenberg, *Anal. Chim. Acta*, 190 (1986) 107.
3 P. Chu and G. H. Kuhl, *Ind. Eng. Chem. Res.*, 26 (1987) 365.
4 M. Voloch, M. R. Ladisch and G. T. Tsao, *React. Polym.*, 4 (1986) 91.
5 K. L. Glajch and R. A. Schunn, *J. High Resolut. Chromatogr. Chromatogr. Commun.*, 4 (1981) 333.
6 L. Petrus, *Ph.D. Thesis*, University of Groningen, 1982, p. 81.
7 V. M. Allenger, D. D. McLean and M. Ternan, *J. Chromatogr. Sci.*, 24 (1986) 95.
8 J. L. Dierickx, P. M. Plehiers and G. F. Froment, *J. Chromatogr.*, 362 (1986) 155.
9 J. Kertzman, *Anal. Instrum.*, 4 (1968) 139.
10 L. Braun and R. Villalobos, *Hydrocarbon Process.*, 46 (1967) 101.
11 S. A. Mooney, F. P. Di Sanzo and L. C. Lowther, *J. High Resolut. Chromatogr. Chromatogr. Commun.*, 5 (1982) 684.
12 *Annual Book of ASTM Standards, Part 18*, American Society for Testing and Materials, Easton, PA, 1970, p. 698.

13 B. Rushby, *Petrol. Rev.*, Feb. (1986) 39.
14 C. L. Guillemin, *J. Chromatogr.*, 239 (1982) 363.
15 J. C. M. Wessels and R. P. M. Dooper, *J. Chromatogr.*, 279 (1983) 349.
16 M. Martin, G. Blu, C. Eon and G. Guiochon, *J. Chromatogr.*, 112 (1975) 399.
17 R. H. Perry and D. Green, *Perry's Chemical Engineers' Handbook*, McGraw-Hill, New York, 6th ed., 1984, pp. 3–88 and 3–106.
18 K. Grob and G. Grob, *J. High Resolut. Chromatogr. Chromatogr. Commun.*, 6 (1983) 133.